PARTS LIST

C-DIT 300 SPREADER

300 CLUTCH DRIVE

yelo™
MADE TO WORK

P 0800 853 002
E info@yelo-agri.com
W www.yelo-agri.com

PARTS & SUPPORT
For parts and service support, contact your authorised Yelo store or visit our website for store locations.
If you need further assistance, we are only a phone call or email away. Parts list included.

RGL.

EXPLODED PARTS DIAGRAM – C-DIT 300 CLUTCH DRIVE

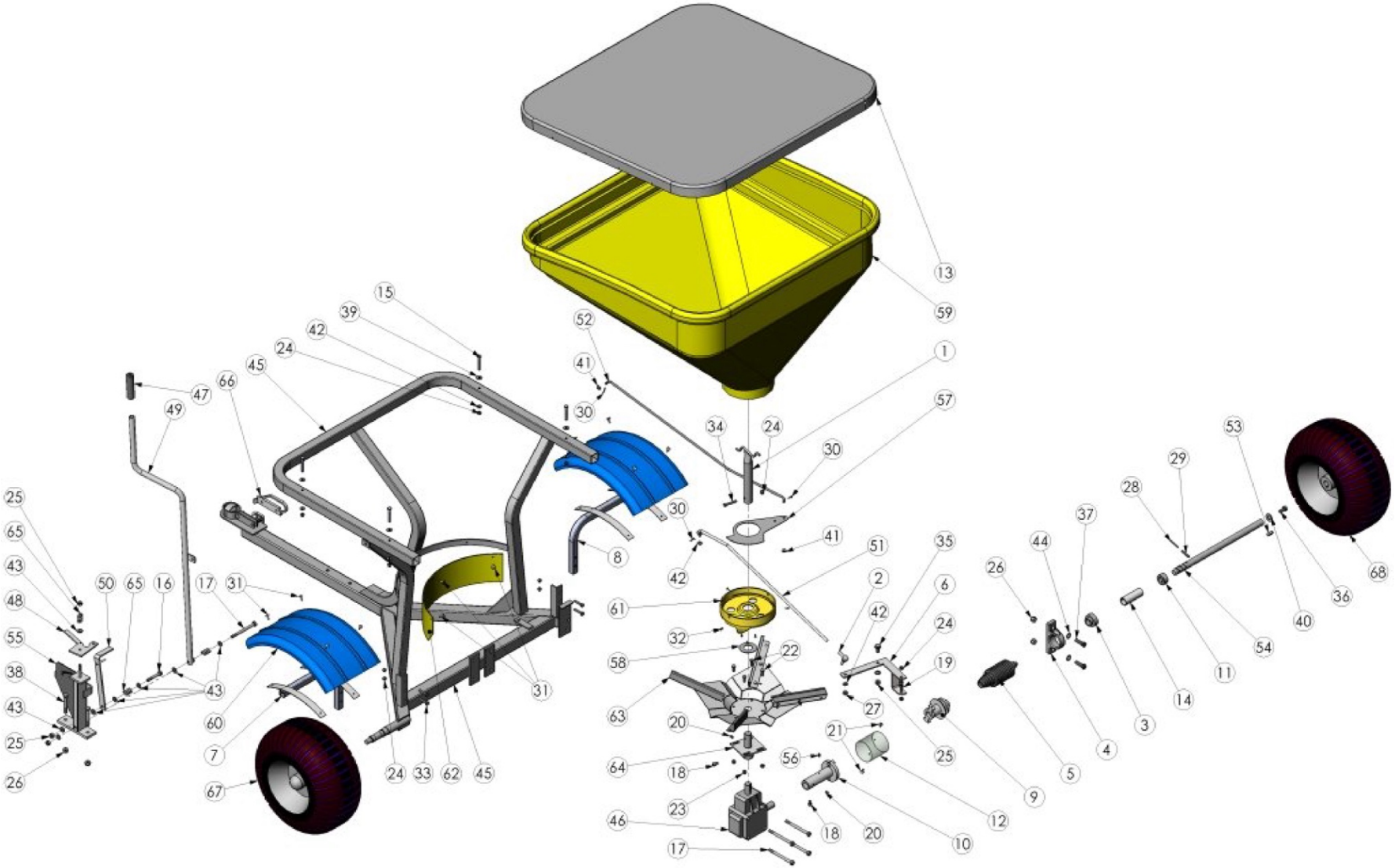

Mudguard kit is an optional extra - part no: 1300-6810

PARTS LIST – C-DIT 300 CLUTCH DRIVE

Item No.	QTY	Part No	Description
1	1	1036-8240	Agitator-Spreader-CDIT300/400-In-Ex300/400-SS
2	1	1110-2310	Ball-End-Internal Thread-M10-Zinc Plated
3	1	1140-1200	Bearing-Ball-Pillow Block-Drive Axle-Spreaders
4	1	1140-4000	Bearing-Housing-Pillow Block-Drive Axle-Spreaders
5	1	1280-1600	Boot-Clutch-Convoluted-CDIT300/400-Rubber
6	1	1300-3010	Bracket-Clutch Engager-CDIT300/400GT-ZP
7	1	1300-6800	Bracket-Mudguard-CDIT300/400/MM165-LH-GL
8	1	1300-6801	Bracket-Mudguard-CDIT300/400/MM165-RH-GL
9	1	2100-2300	Clutch-Engager-CDIT400-ZP
10	1	2100-6000	Clutch-Pin Engager-CDIT300/400-ZP
11	1	2150-0025	Collar-Shaft-ID25-ZP
12	1	2250-1600	Cover-Clutch-CDIT300/400-OD 90x92 Long-Grey-PVC
13	1	2250-4100	Cover-Hopper-Silver Fabric-Spreader CDIT300
14	1	2250-7920	Cover-Shaft-Drive Axle-90mm Long-CDIT300GT-PVC
15	4	2810-0860	Fastener-Bolt&Nut-Hex-304 Grade-M8x60-Stainless
16	1	2840-1065	Fastener-Bolt&Nut-Hex-8.8 Grade-M10x65-ZP
17	5	2840-1120	Fastener-Bolt&Nut-Hex-8.8 Grade-M10x120-ZP
18	2	2890-0812	Fastener-Cap Head-Allen-Screw-12.9 Grade-M8x12-Black
19	2	2890-0816	Fastener-Cap Head-Allen-Screw-12.9 Grade-M8x16-Black
20	2	3010-0810	Fastener-Grub Screw-Socket Head-M8x10-Stainless
21	2	3070-0512	Fastener-Machine-Screw-CSK-M5x12-Phillips-Stainless
22	4	3075-0820	Fastener-Set-Screw-Hex-304 Grade-M8x20-Stainless
23	4	3130-0108	Fastener-Nut-Nyloc-M8-Stainless Steel

24	11	3170-0008	Fastener-Nut-Nyloc-M8-ZP
25	8	3170-0010	Fastener-Nut-Nyloc-M10-ZP
26	4	3170-0012	Fastener-Nut-Nyloc-M12-ZP
27	1	3180-0010	Fastener-Nut-Plain-M10-ZP
28	1	3210-0540	Fastener-Pin-Roll-M5x40-Black
29	1	3210-0840	Fastener-Pin-Roll-M8x40-BK
30	3	3220-0320	Fastener-Pin-Split-M3.2x20-ZP
31	11	3240-0018	Fastener-Rivet-Blind-Truss Head-3/16x18mm-Aluminium
32	6	3270-8012	Fastener-Self Tap-Screw-CSK-8Gx1/2"-Pozi-Stainless
33	4	3290-0840	Fastener-Set Screw-Hex-8.8 Grade-M8x40-ZP
34	1	3290-0850	Fastener-Set Screw-Hex-8.8 Grade-M8x50-ZP
35	1	3290-1025	Fastener-Set Screw-Hex-8.8 Grade-M10x25-ZP
36	1	3290-1225	Fastener-Set Screw-Hex-8.8 Grade-M12x25-ZP
37	2	3290-1240	Fastener-Set Screw-Hex-8.8 Grade-M12x40-ZP
38	2	3290-1275	Fastener-Set Screw-Hex-8.8 Grade-M12x75-ZP
39	4	3310-2809	Fastener-Washer-Flat-M8x22x1.5-Grade 316-Stainless
40	1	3310-5012	Fastener-Washer-Flat-Heavy-M12x32x3-Galv
41	2	3310-6008	Fastener-Washer-Flat-M8-ZP
42	6	3310-6008	Fastener-Washer-Flat-M8-ZP
43	10	3310-6010	Fastener-Washer-Flat-M10-ZP
44	2	3310-6012	Fastener-Washer-Flat-M12-ZP
45	1	3500-5600	Frame-Spreader-CDIT300GT-GL
46	1	3800-1000	Gearbox-Ferroni-RV10-Ratio 1 to 2.78
47	1	3865-3800	Grip-Handle-7/8"-PVC-Black-Plastic
48	1	3990-3900	Guide-Handle-CDIT300/400GT-ZP
49	1	4050-1500	Handle-CDIT300/400GT-ZP

50	1	4050-4250	Handle-Indicator-CDIT400GT-ZP
51	1	5050-1600	Linkage-Clutch-CDIT300/400GT-ZP
52	1	5050-7960	Linkage-Shutter-CDIT300GT-ZP
53	1	5200-6300	Machined-Key-8x8-Ground Drive Spreaders
54	1	5200-6500	Machined-Shaft-Axle-CDIT300GT- ZP
55	1	5245-3900	Mount-Handle-CDIT300/400GT-ZP
56	1	5270-0003	Nipple-Grease-Straight-Short-M6-ZP
57	1	6500-7770	Profiled-Shutter-CDIT300/400
58	1	6500-9000	Profiled-Washer-Spinner Shaft-34.9x67x2mm-Stainless 304
59	1	7500-2140	Rota-Hopper-Spreader-CDIT300 -Yellow-MDPE
60	2	7500-2590	Rota-Mudguard-MDPE-1/4 Circle
61	1	7500-2830	Rota-Spout-Spreader-CDIT400GT-Yellow-MDPE
62	1	7970-8200	Shroud-Spreader CDIT300GT-MDPE-Yellow
63	1	8200-1010	Spinner Assembly-Spreader-CDIT300/400-STAINLESS
64	1	8200-5200	Spinner-Mount-CDIT300/400/INEX300-ZP
65	3	8250-1800	Spring-Compression-Crinkle Plate-ZP
66	1	8800-3800	Tow-Coupling-Handle-Double Ended-1 78 x 50mm-ZP
67	1	9200-8700	Wheel-Turf-Bearing-18x950x8-4 Ply
68	1	9200-8900	Wheel-Turf-Keyed-18x950x8-4 Ply